Metrologic ML869 HeNe Laser PSU (ML-869)

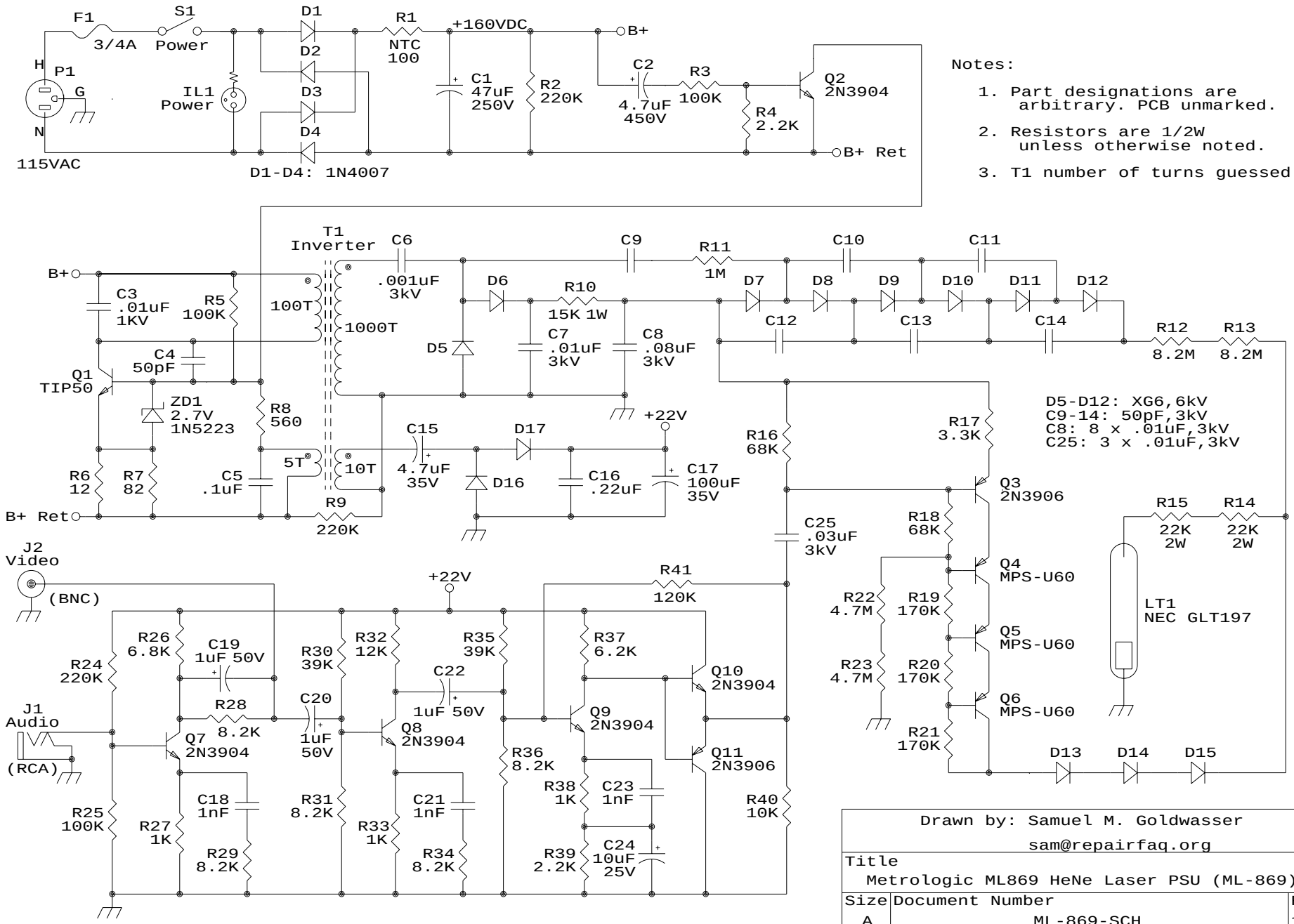

Notes:

1. Part designations are arbitrary. PCB unmarked.
2. Resistors are 1/2W unless otherwise noted.
3. T1 number of turns guessed.

Drawn by: Samuel M. Goldwasser sam@repairfaq.org		
Title Metrologic ML869 HeNe Laser PSU (ML-869)		
Size A	Document Number ML-869-SCH	REV 1.1
Date: August 15, 2002	Sheet 1 of 1	